Product data sheet



GF Uponor Radi Pipe natural PN6 S 40x3,7 6m

1008939

- Operating pressure 6 bar
- 6m bars

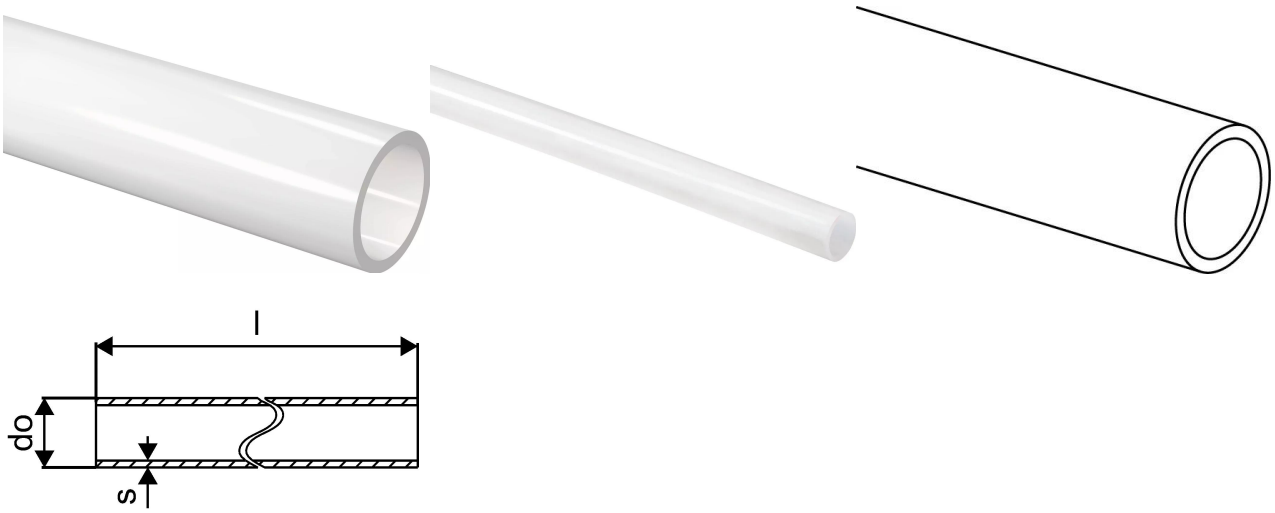

About GF Uponor Radi Pipe natural PN6 S

Specification

- Pipes manufactured from cross-linked polyethylene - PE-Xa acc. BS EN ISO 15875 with EVOH oxygen barrier
- Application class 5 - high temperature radiators
- Fire class E according to BS EN 13501-1.
- Conduits manufactured from high density polyethylene

Application

- Heating: The permanent operating temperature ranges up to 80°C. The short-term malfunction temperature is 100°C for a period of 100 hours in the operating life time.

GF Uponor Radi Pipe natural PN6 S 40x3,7 6m

1008939

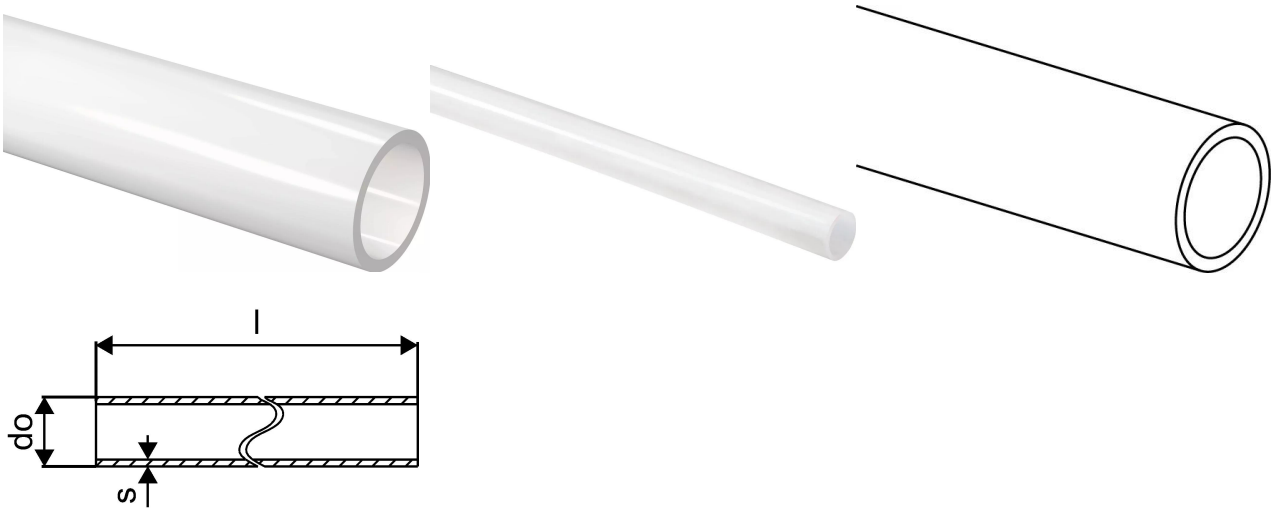

Status

Item Available From date	2026-04-15

Product code

Item no EAN	7321500018061
Item no GF	35001008939
Item no GTIN	07321500018061
Item no NRF	8362379
Item no RSK	2418232
Item no VVS	087229140

Dimensions

Item Unit Height	40
Item Unit Length	1000
Item Unit Weight	0,437
Item Unit Width	40
Item_UOM	m

Measurements

Outer Diameter_do	40
Wall thickness_s	3,7

Packaging

Packaging GTIN PL1	06414905422012

Packaging GTIN PL4	06414905662852
Packaging Height PL1	40
Packaging Height PL4	700
Packaging Length PL1	6000
Packaging Length PL4	6100
Packaging Quantity PL1	6
Packaging Quantity PL4	840
Packaging Type PL1	Plastic_Bag
Packaging Type PL4	Wooden_Cage
Packaging Volume PL1	0,0096
Packaging Volume PL4	2,7755
Packaging Weight PL1	2,672
Packaging Weight PL4	399,08
Packaging Width PL1	40
Packaging Width PL4	650

Technical documents

Download documents here

Excellence in Flow

Visit our webpage to get in contact with your local specialist:
www.georgfischer.com/locations



Uponor UK

Blackmor Lane The Pavillion
WD18 8GA, Watford
UK

T +44 (0)1923 381212
E customerservice.uk.bfs@georgfischer.com

www.uponor.com/en-gb

+GF+